Lexmark MX810 MX811 MX812 Series Monochrome Laser Multifunction Products

Built for Top Performance.

Meet the star of our high performance lineup. The Lexmark MX810 Series MFP saves time with blazing-fast processor, print, copy and scan speeds, plus it packs productivity solutions that boost your competitive edge. *Need faster speeds? Choose the MX811 or the MX812.*

MX81x dfe with two additional 550-sheet trays

Up to 66 ppm

25.9-cm (10.2-Inch) Touch Screen

Security

Finishing Function

Unison™ TONER

Set the Pace for Increased Productivity.

Stay a step ahead and get more work done faster. These systems can meet your most demanding expectations, providing professional, finished documents. Choose the options you like to build the solution you need.

Faster Processing - Improve your print, scan and copy speeds by taking advantage of up to 3 GB of upgradeable memory, an 800 MHz dual-core processor and Gigabit Ethernet.

Reliable High Performance - Easily print or copy up to 35,000 pages per month, and enjoy fewer maintenance hassles, thanks to our state-of-the-art paper handling.

Keep Jobs Moving - With a maximum input capacity of up to 2,750 sheets and an extra high yield toner cartridge, you'll rarely have to add paper or change cartridges.

Get Work Done Quickly - Enjoy print and copy speeds from 52 to 60 pages per minute, produce your first page in as little as 4.4 seconds and rapidly scan a two-sided document in a single pass. Want to print or copy up to 66 pages per minute? Get the MX812.

Look Professional. Work Smarter.

Using our multifunction printer is really simple. Complex and repetitive tasks are reduced to a simple touch of a button. Now you can deliver great-looking documents fast, and focus more on your business.

Large Touch Screen - A vibrant, easy-to-use 10 inch (26 cm) colour touch screen provides access to pre-installed workflow solutions

One-touch Controls - Preview your held jobs to print only the pages you need and make changes on the fly. Choose multi-image printing on one page, or select two-sided printing to save paper.

Print on a Wide Range of Media - With built-in two-sided printing and the ability to print on diverse materials, you can do more for your business and use less paper.

Innovative Toner That Optimises Performance - Get greater system performance with Lexmark's Unison™ Toner, which delivers consistent image quality from the first print to the last.

Intelligent Workflow. Secure Design.

Our pre-loaded business solutions simplify your work processes and increase productivity. Ultra advanced security capabilities provide maximum protection for your critical business data.

Print Anytime and Anywhere[6] - With this system, you can print from desktops as well as smart mobile devices.

Apps Make It Easy - Pre-loaded solutions work much like mobile phone apps. Touch the screen and access shortcuts to scan, print, copy or send faxes, emails and other documents fast.

Enjoy Enterprise-level Security - Now you can authenticate, authorise and audit employee usage. To protect sensitive data, you can also use standard network security protocols, data encryption and disk wiping capabilities.

Identify Potential Risks - Track more than 100 variables and events, including user activity, with Audit Logging. It's designed to work with your intrusion detection system in real time.

LEXMARK™

Lexmark MX810 MX811 MX812 Series Monochrome Laser Multifunction Products

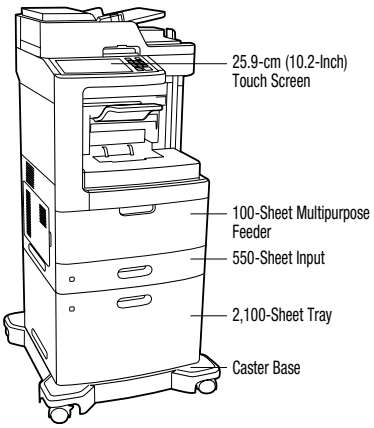

MX810/811/812dxfe

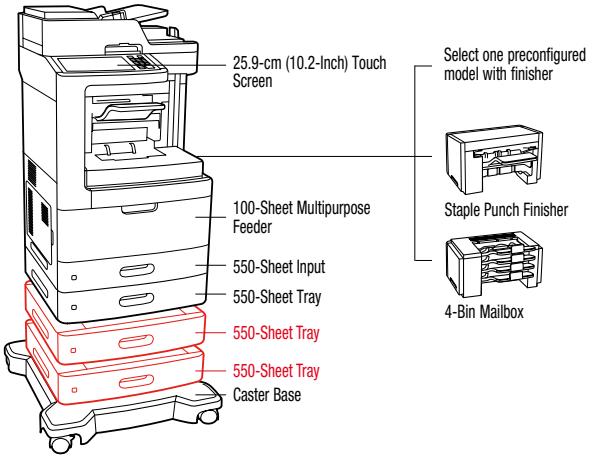

MX810/811/812dfe

Standard

Optional

Product specifications	Lexmark MX810dfe / MX810dxfe	Lexmark MX811dfe / MX811dxfe	Lexmark MX812dfe / MX812dxfe
Printing			
Function	Printing, Network Scanning, Faxing, Copying, Colour Scanning		
Display	Lexmark e-Task 25.9 cm (10.2-inch) colour touch screen		
Print Speed: Up to[4]	Black: 52 ppm	Black: 60 ppm	Black: 66 ppm
Time to First Page: As fast as	Black: 4.8 seconds	Black: 4.4 seconds	Black: 4.0 seconds
Print Resolution	Black: 600 x 600 dpi, 2400 Image Quality, 1200 x 1200 dpi, 1200 Image Quality		
Memory / Processor	Standard: 1024 MB / Maximum: 3072 MB / Processor: Dual Core, 800 MHz		
Hard Disk	as standard		
Recommended Monthly Page Volume[2]	5,000 - 35,000 Pages		
Maximum Monthly Duty Cycle: Up to[3]	300,000 pages per month		
Copying			
Copy Speed: Up to[4]	Black: 52 cpm	Black: 60 cpm	Black: 66 cpm
Time to First Copy: As fast as	Black: 4.5 seconds	Black: 4.2 seconds	Black: 4 seconds
Colour Scanning			
Scanner Type / ADF Scan	Flatbed scanner with ADF / DADF (single pass Duplex) / 150 pages 75 gsm bond		
Duplex Scan Speed: Up to	A4/Ltr, Black: 70 / 72 sides per minute - A4/Ltr, Colour: 66 / 68 sides per minute		
Simplex Scan Speed: Up to	A4/Ltr, Black: 67 / 70 sides per minute - A4/Ltr, Colour: 67 / 70 sides per minute		
Optical Scanning Resolution	600 X 600 dpi (mono), 300 X 300 dpi (colour)		
Faxing			
Modem Speed	ITU T.30, V.34 Half-Duplex, 33.6 Kbps		
Supplies[5]			
Laser Cartridge Yields	6,000[1]-page Cartridge, 45,000[1]-page Extra High Yield Cartridge, 25,000[1]-page High Yield Cartridge	6,000[1]-page Cartridge, 45,000[1]-page Extra High Yield Cartridge, 25,000[1]-page High Yield Cartridge	25,000[1]-page High Yield Cartridge, 45,000[1]-page Extra High Yield Cartridge, 6,000[1]-page Cartridge
Imaging Unit Estimated Yield: Up to	100,000 pages, based on 3 average letter/A4-size pages per print job and ~ 5% coverage		
Cartridge(s) Shipping with Product	25,000[1]-page High Yield Return Program Toner Cartridge		
Paper Handling			
Included Paper Handling (dfe)	Integrated Duplex, 550-Sheet Tray, 550-Sheet Output Bin, Staple Finisher, 550-Sheet Input, 100-Sheet Multipurpose Feeder	Staple Finisher, 550-Sheet Input, 100-Sheet Multipurpose Feeder, 550-Sheet Output Bin, Integrated Duplex, 550-Sheet Tray	Integrated Duplex, 550-Sheet Tray, 550-Sheet Output Bin, Staple Finisher, 550-Sheet Input, 100-Sheet Multipurpose Feeder
Included Paper Handling (dxfe)	Staple Finisher, 550-Sheet Input, 100-Sheet Multipurpose Feeder, 550-Sheet Output Bin, Integrated Duplex, 2100-Sheet Tray		
Optional Paper Handling	dfe: 550-Sheet Tray -- dxfe: Not Applicable		
Paper Input Capacity, Standard: Up to (dfe)	Standard: 1,200 pages 75 gsm bond / Maximum: 2,300 pages 75 gsm bond		
Paper Input Capacity, Standard: Up to (dxfe)	Standard: 2,750 pages 75 gsm bond / Maximum: 2,750 pages 75 gsm bond		
Paper Output Capacity: Up to	Standard: 1,050 pages 75 gsm bond / Maximum: 1,050 pages 75 gsm bond		
Media Types Supported	Refer to the Card Stock & Label Guide, Card Stock, Dual Web Labels, Envelopes, Integrated Labels, Paper Labels, Plain Paper, Transparencies		
Media Sizes Supported	A6, Oficio, 10 Envelope, 7 3/4 Envelope, 9 Envelope, A4, A5, B5 Envelope, C5 Envelope, DL Envelope, Universal, Statement, Letter, Legal, JIS-B5, Folio, Executive		
General			
Standard Ports	One Internal Card Slot, Gigabit Ethernet (10/100/1000), USB 2.0 Specification Hi-Speed Certified (Type B), Rear USB 2.0 Specification Hi-Speed Certified port (Type A), Front USB 2.0 Specification Hi-Speed Certified port (Type A)		
Optional Network Ports / Optional Local Ports	Internal MarkNet N8350 802.11b/g/n Wireless / Internal RS-232C serial, Parallel 1284-B Interface Card		
Noise Level, Operating	Printing: 55 dBA / Copy: 55 dBA / Scan: 57 dBA	Printing: 55 dBA / Copy: 56 dBA / Scan: 57 dBA	Printing: 56 dBA / Copy: 56 dBA / Scan: 57 dBA
Product Guarantee	1-Year Onsite Service		
Size (mm. - H x W x D) / Weight (kg)	dfe: 1133 x 663 x 734 mm / 87.6 kg -- dxfe: / 100.0 kg		

Visit www.lexmark.co.uk for more information on all Lexmark MX810, MX811 and MX812 models.

[1] Average standard page yield value declared in accordance with ISO/IEC 19752. [2] "Recommended Monthly Page Volume" is a range of pages that helps customers evaluate Lexmark's product offerings based on the average number of pages customers plan to print on the device each month. Lexmark recommends that the number of pages per month be within the stated range for optimum device performance, based on factors including: supplies replacement intervals, paper loading intervals, speed, and typical customer usage. [3] "Maximum Monthly Duty Cycle" is defined as the maximum number of pages a device could deliver in a month using a multishift operation. This metric provides a comparison of robustness in relation to other Lexmark printers and MFPs. [4] Print and copy speeds measured in accordance with ISO/IEC 24734 and ISO/IEC 24735 respectively (ESAT). For more information see: www.lexmark.com/ISOspeeds. [5] Product functions only with replacement cartridges designed for use in a specific geographical region. See www.lexmark.com/regions for more details. [6] For more information on Lexmark Mobile Solutions see: lexmark.com/mobile

Unison is a trademark of Lexmark International, Inc. AirPrint and the AirPrint logo are trademarks of Apple Inc. Information in this document is subject to change without notice. ENERGY STAR® is a U.S. registered mark. All other trademarks are the property of their respective owners. Lexmark and Lexmark with the diamond design are trademarks of Lexmark International, Inc., registered in the United States and/or other countries.