Lexmark CS510 Series Color Laser Printer

Professional Quality Colour. Peak Performance.

CS510de

Meet the new star in Lexmark's colour laser printer lineup for mid-sized workgroups. The Lexmark CS510 Series colour laser printer provides spot-on PANTONE® colour matching, smart print management and super-fast speeds that make it a workhorse winner. *Want more capacity? Get the CS510dte.*

Colour | Up to 30 ppm | 10.9-cm (4.3-inch) Touch Screen | Solutions | Unison™ TONER

Present Your Brand with Accurate Colour

Produce beautiful, vibrant tones and print your branded materials in-house. This all-new model packs advanced productivity capabilities to help you work faster and smarter.

Professional Colour Matching - Lexmark Named Color Replacement and PANTONE® calibration make it easy to develop a consistent brand image by accurately matching your colours.

High Resolution Graphics - With up to true 1200x1200 dpi resolution, images and graphics stay crisp. Lexmark's Unison™ Toner ensures consistent quality, too.

Super Fast and Quiet Output - Power through projects with print speeds up to 30 pages per minute in black and colour, plus produce a 1-page colour document in as little as 10 seconds.

Print Complex Documents Even Faster - Even complex colour documents print fast, thanks to its new, high-speed dual-core processor, 512 MB of upgradable memory and Gigabit Ethernet.

More Performance. Less Hassle.

In a tough, deadline-driven environment, this system really performs. With a bright colour touch screen, convenient USB port, large paper input capacity and more, our solution makes printing a pleasure.

Reliable Performance - Easily print up to 7,000 pages per month, plus enjoy fewer maintenance hassles, thanks to our state-of-the-art paper handling.

Bright Touch Screen - Our easy-to-use 10.9 cm (4.3 inch) colour touch screen allows you to preview and make post job changes fast.

Run Larger Jobs without Interruption - With an input capacity of up to 1,450 sheets and extra high yield toner cartridge options, you won't have to add paper or change cartridges as often.

Innovative Toner That Optimises Performance - Get greater system performance with Lexmark's Unison™ Toner, which delivers consistent image quality from first print to last.

Network Intelligent. Management Wise.

Quickly respond to changing business needs with our eco-friendly printers that help streamline your workflow using productivity solutions.

Print Anytime and Anywhere[6] - With this system, you can print from desktops as well as mobile devices that can run applications.

Better Manage Print Jobs - Take advantage of smart functions like job waiting, custom messaging and programmable alerts.

Enjoy Enterprise-level Security - Now you can authenticate, authorise and audit employee usage. Plus, protect sensitive data using standard network security protocols.

Save Resources and the Planet - An instant warm-up fuser and built-in two-sided printing plus Quiet, Hibernate and Eco modes minimise noise and save paper and energy.

LEXMARK™

Lexmark CS510 Series Color Laser Printer

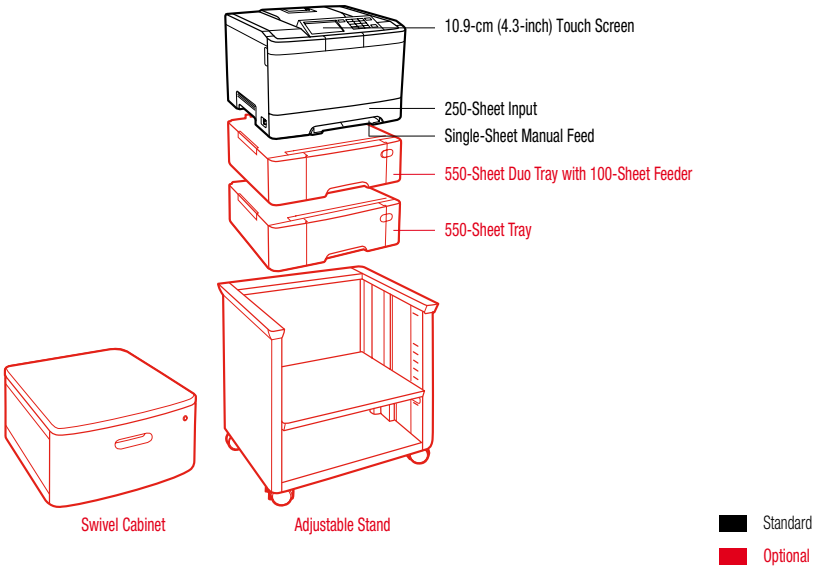

Product specifications	Lexmark CS510de	Lexmark CS510dte
Printing		
Display	Lexmark e-Task 10.9 cm (4.3-inch) colour touch screen	
Print Speed: Up to[4]	Black: 30 ppm / Colour: 30 ppm	
Time to First Page: As fast as	Black: 9 seconds / Colour: 10 seconds	
Print Resolution	Black: 1200 x 1200 dpi, 4800 Colour Quality (2400 x 600 dpi) / Colour: 1200 x 1200 dpi, 4800 Colour Quality (2400 x 600 dpi)	Black: 4800 Colour Quality (2400 x 600 dpi), 1200 x 1200 dpi / Colour: 4800 Colour Quality (2400 x 600 dpi), 1200 x 1200 dpi
Memory / Processor	Standard: 512 MB / Maximum: 2560 MB / Processor: Dual Core, 800 MHz	
Hard Disk	Option available	
Recommended Monthly Page Volume[2]	1500 - 7000 pages	
Maximum Monthly Duty Cycle: Up to[3]	85000 pages per month	
Supplies[5]		
Laser Cartridge Yields	1,000[1]-page Black and Colour (CMYK) Cartridges, 3,000[1]-page Colour (CMY) High Yield Cartridges, 4,000[1]-page Black High Yield Cartridge, 8,000[1]-page Black Extra High Yield Cartridge, 4,000[1]-page Colour (CMY) Extra High Yield Cartridges	
Cartridge(s) Shipping with Product	6,000[1]-page Black Starter Return Program Toner Cartridge, 4,000[1]-page Colour (CMY) Extra High Yield Return Program Toner Cartridges	4,000[1]-page Colour (CMY) Extra High Yield Return Program Toner Cartridges, 6,000[1]-page Black Starter Return Program Toner Cartridge
Paper Handling		
Included Paper Handling	Single-Sheet Manual Feed, Integrated Duplex, 125-Sheet Output Bin, 250-Sheet Input	Single-Sheet Manual Feed, Integrated Duplex, 125-Sheet Output Bin, 550-Sheet Duo Tray with 100-Sheet Feeder, 250-Sheet Input
Optional Paper Handling	550-Sheet Tray, 550-Sheet Duo Tray with 100-Sheet Feeder	550-Sheet Tray
Paper Input Capacity: Up to	Standard: 250+1 pages 75 gsm bond / Maximum: 1450+1 pages 75 gsm bond	Standard: 900+1 pages 75 gsm bond / Maximum: 1450+1 pages 75 gsm bond
Paper Output Capacity: Up to	Standard: 125 pages 75 gsm bond / Maximum: 125 pages 75 gsm bond	
Media Types Supported	Refer to the Card Stock & Label Guide, Transparencies, Card Stock, Paper Labels, Plain Paper	Paper Labels, Plain Paper, Transparencies, Refer to the Card Stock & Label Guide, Card Stock, Envelopes
Media Sizes Supported	Oficio, Universal, Letter, Legal, A4, Folio, Executive, A5, JIS-B5	Oficio, 10 Envelope, 7 3/4 Envelope, 9 Envelope, A4, A5, B5 Envelope, Universal, Letter, Legal, JIS-B5, Folio, Executive, DL Envelope, C5 Envelope
General[7]		
Standard Ports	Rear USB 2.0 Specification Hi-Speed Certified port (Type A), Front USB 2.0 Specification Hi-Speed Certified port (Type A), Gigabit Ethernet (10/100/1000), USB 2.0 Specification Hi-Speed Certified (Type B)	Gigabit Ethernet (10/100/1000), USB 2.0 Specification Hi-Speed Certified (Type B), Rear USB 2.0 Specification Hi-Speed Certified port (Type A), Front USB 2.0 Specification Hi-Speed Certified port (Type A)
Optional Network Ports / Optional Local Ports	MarkNet N8352 802.11b/g/n Wireless	
Noise Level, Operating	Print: 50 dBA	
Product Guarantee	1-Year Onsite Service	
Size (mm. - H x W x D) / Weight (kg)	306 x 442 x 407 mm / 20.9 kg	437 x 442 x 416 mm / 25.1 kg

[1] Average continuous black or continuous composite CMY declared cartridge yield up to this number of standard pages in accordance with ISO/IEC 19798. [2] "Recommended Monthly Page Volume" is a range of pages that helps customers evaluate Lexmark's product offerings based on the average number of pages customers plan to print on the device each month. Lexmark recommends that the number of pages per month be within the stated range for optimum device performance, based on factors including: supplies replacement intervals, paper loading intervals, speed, and typical customer usage. [3] "Maximum Monthly Duty Cycle" is defined as the maximum number of pages a device could deliver in a month using a multishift operation. This metric provides a comparison of robustness in relation to other Lexmark printers and MFPs. [4] Print and copy speeds measured in accordance with ISO/IEC 24734 and ISO/IEC 24735 respectively (ESAT). For more information see: www.lexmark.com/ISOspeeds. [5] Product functions only with replacement cartridges designed for use in a specific geographical region. See www.lexmark.com/regions for more details. [6] For more information on Lexmark Mobile Solutions see: lexmark.com/mobile [7] Printers are sold subject to certain license/agreement conditions. See www.lexmark.com/printerlicense for details.

Unison is a trademark of Lexmark International, Inc. AirPrint and the AirPrint logo are trademarks of Apple Inc. PANTONE® is a registered trademark of Pantone, Inc. Information in this document is subject to change without notice. ENERGY STAR® is a U.S. registered mark. All other trademarks are the property of their respective owners. Lexmark and Lexmark with the diamond design are trademarks of Lexmark International, Inc., registered in the United States and/or other countries.